WORKSHOP SERVICE

SUSPENSION
ROUND AXLE ALII-R/EA

AIRLIGHT II ROUND – TIGHTENING TORQUES
70mm WIDE TRAILING ARM / M22 U-BOLTS

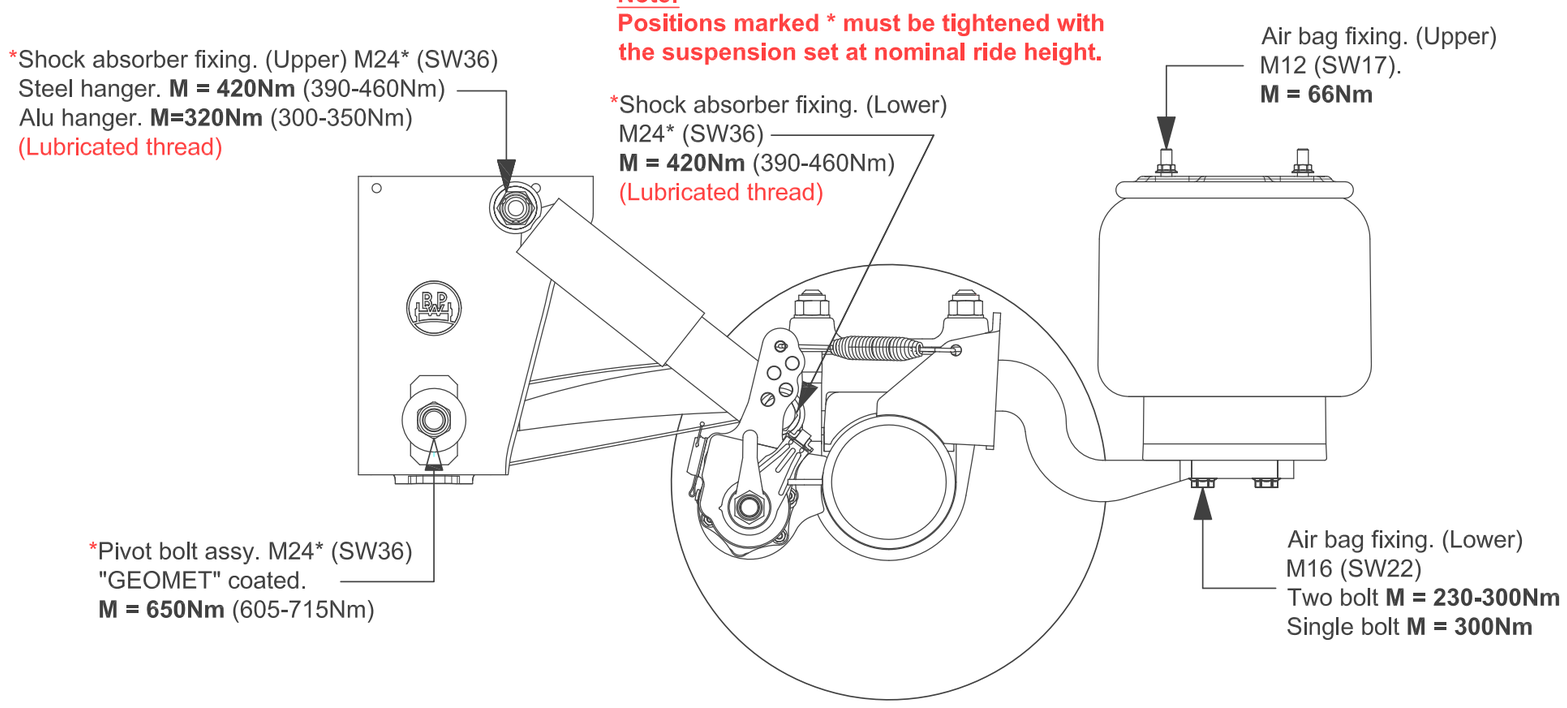

Note: M22 "U" Bolt. (SW32)
Axle "U" bolts are factory assembled & tightened.
No further torque checking during installation.
If replacing parts use NEW "U" bolts and tighten uniformly to 550Nm + 90°. (Lubricated thread)
For maintenance requirements see service manual.
Make all tracking adjustments at the pivot bolt assy.

U-BOLT

ASSEMBLY INSTRUCTIONS

- Grease U-bolt thread and the contact surfaces of the lock nuts.
- Self locking nuts are to be equally tightened diagonally - 1, 2, 3 and 4 - until all have achieved a tightening torque of 200Nm, then 300Nm, then 450Nm and then all to 550Nm.
- Finally, tighten all the nuts in sequence by a further 90° angle.

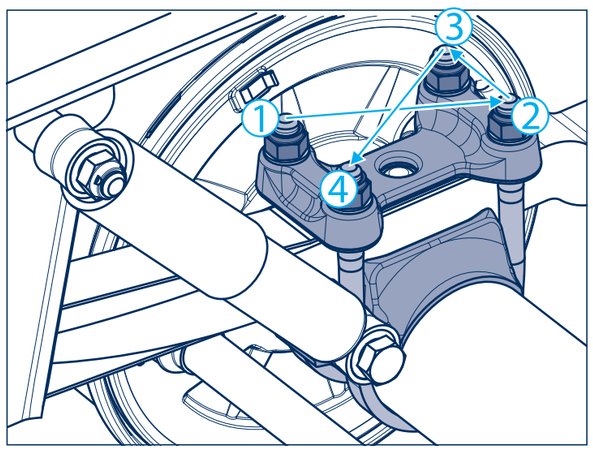

NOTE:

1. Replace U-bolts in pairs and **do not** re-use U-bolts that have been previously fitted - **always** fit new nuts and washers.
2. Wear to the clamping parts or axle beam due to loss of clamping force must be fully investigated and any worn items replaced.

ECO AIR – TIGHTENING TORQUES
TWO-PIECE TRAILING ARM / M20 U-BOLTS

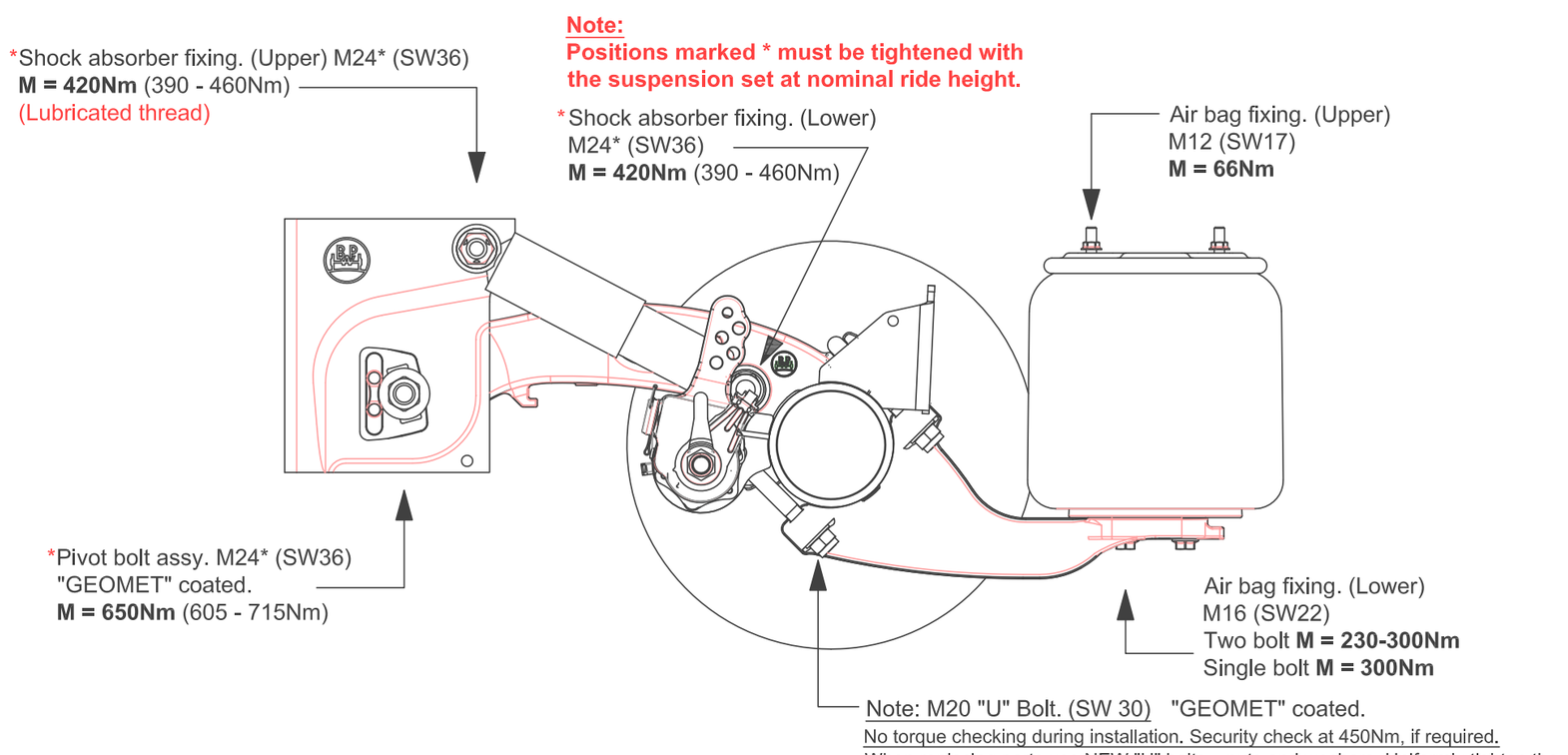

Note: M20 "U" Bolt. (SW 30) "GEOMET" coated.
No torque checking during installation. Security check at 450Nm, if required.
When replacing parts use NEW "U" bolts , nuts and washers. Uniformly tighten the nuts, diagonally & in sequence, to 200Nm, then 350Nm, then 450Nm;
sequencially tighten with a rotation angle of +90° and finally a further.+90°
Note: +180° is not permissible. For full instructions see workshop manual.
Make all tracking adjustments at the pivot bolt assy.

U-BOLT

ASSEMBLY INSTRUCTIONS

- Grease U-bolt thread and the contact surfaces of the lock nuts.
- Self locking nuts are to be uniformly tightened diagonally and in sequence to 200Nm, then 350Nm, then 450 Nm.
- Tighten all the nuts in sequence by a 90° angle and finally a further 90° angle.

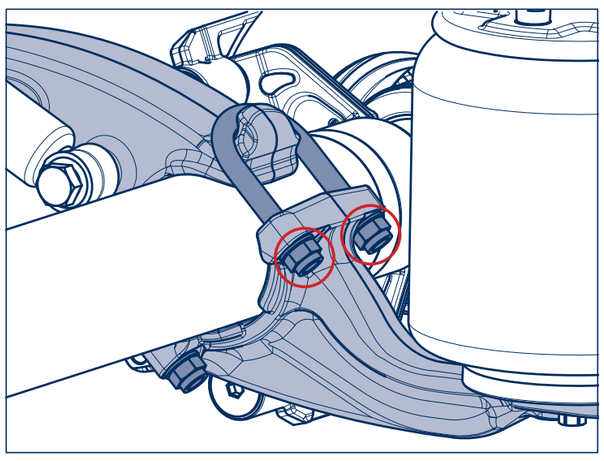

NOTE:

1. Replace U-bolts in pairs and **do not** re-use U-bolts that have been previously fitted - **always** fit new nuts and washers.
2. Wear to the clamping parts or axle beam due to loss of clamping force must be fully investigated and any worn items replaced.

FOR MORE INFORMATION ON THE MAINTENANCE OF BPW RUNNING GEAR, PLEASE REFER TO THE MAINTENANCE INSTRUCTIONS VIA THE QR CODE.

BPW Limited | Centurion Way | Meridian Business Park | Leicester LE19 1WH
Tel: 0116 281 6100 | Email: info@bpw.co.uk | www.bpw.co.uk

Copyright© BPW Limited. SUSPENSION ROUND AXLE.JUN2023.v5

BPW Limited | @wearebpwuk | BPW Limited | BPWUK

we think transport